1.2_004

1.2_004

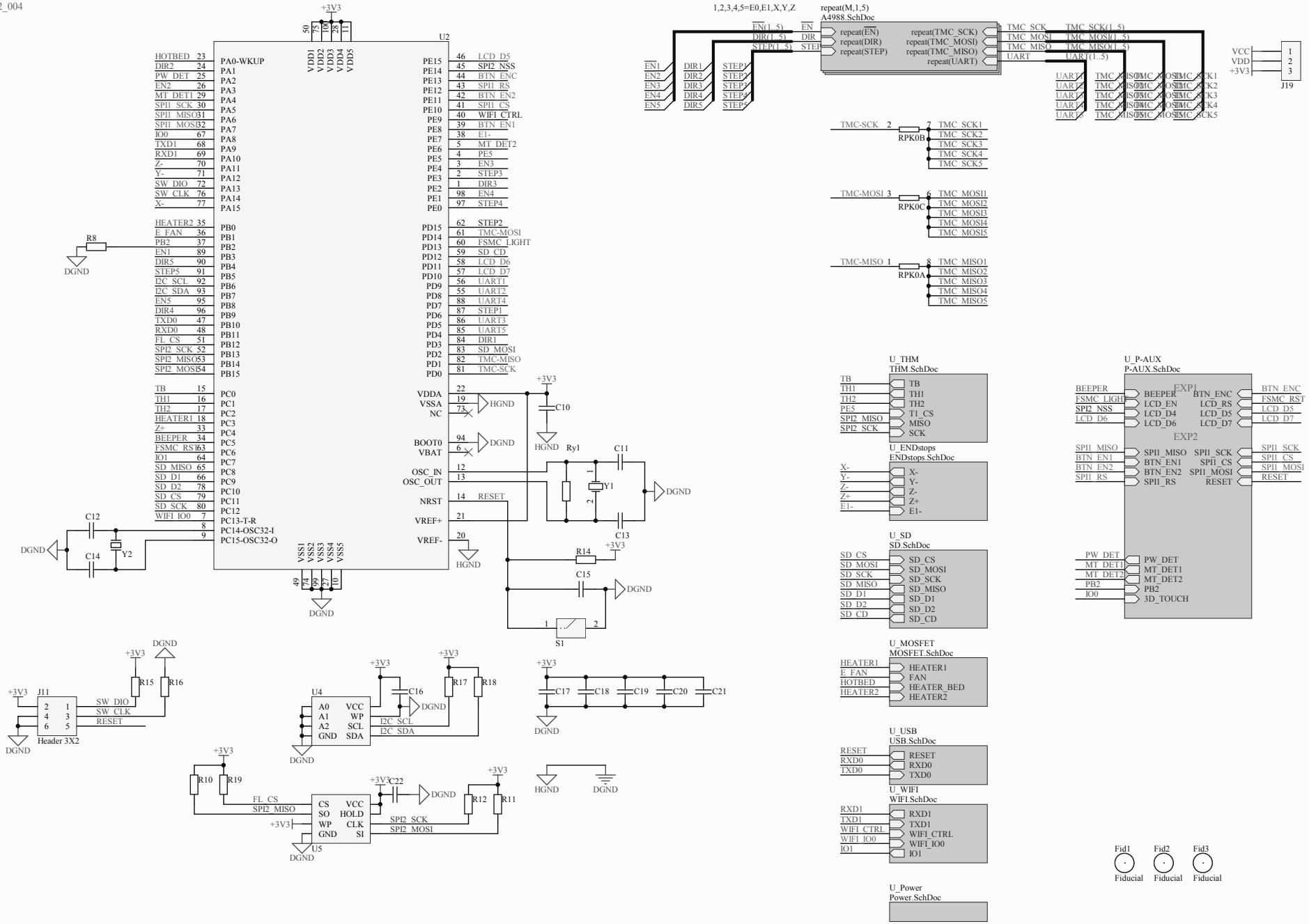
U2
HOTBED 23
DIR2 24
PW_DET 25
EN2 26
MT_DET1 29
SPI1_SCK 30
SPI1_MISO 31
SPI1_MOSI 32
IO0 67
TXD1 68
RXD1 69
Z- 70
Y- 71
SW_DIO 72
SW_CLK 76
X- 77
HEATER2 35
E_FAN 36
PB2 37
EN1 89
DIR5 90
STEP5 91
I2C_SCL 92
I2C_SDA 93
EN5 95
DIR4 96
TXD0 47
RXD0 48
FL_CS 51
SPI2_SCK 52
SPI2_MISO 53
SPI2_MOSI 54
TB 15
TH1 16
TH2 17
HEATER1 18
Z+ 33
BEEPER 34
FSMC_RST 63
IO1 64
SD_MISO 65
SD_D1 66
SD_D2 78
SD_CS 79
SD_SCK 80
WIFI_IO0 7
8
9
PA0-WKUP
PA1
PA2
PA3
PA4
PA5
PA6
PA7
PA8
PA9
PA10
PA11
PA12
PA13
PA14
PA15
PB0
PB1
PB2
PB3
PB4
PB5
PB6
PB7
PB8
PB9
PB10
PB11
PB12
PB13
PB14
PB15
PC0
PC1
PC2
PC3
PC4
PC5
PC6
PC7
PC8
PC9
PC10
PC11
PC12
PC13-T-R
PC14-OSC32-I
PC15-OSC32-O
VDD1 VDD2 VDD3 VDD4 VDD5
VSS1 VSS2 VSS3 VSS4 VSS5
PE15 46 LCD_D5
PE14 45 SPI2_NSS
PE13 44 BTN_ENC
PE12 43 SPI1_RS
PE11 42 BTN_EN2
PE10 41 SPI1_CS
PE9 40 WIFI_CTRL
PE8 39 BTN_EN1
PE7 38 E1-
PE6 5 MT_DET2
PE5 4 PE5
PE4 3 EN3
PE3 2 STEP3
PE2 1 DIR3
PE1 98 EN4
PE0 97 STEP4
PD15 62 STEP2
PD14 60 FSMC_LIGHT
PD13 59 SD_CD
PD12 58 LCD_D6
PD11 57 LCD_D7
PD10 56 UART1
PD9 55 UART2
PD8 88 UART4
PD7 87 STEP1
PD6 86 UART3
PD5 85 UART5
PD4 84 DIR1
PD3 83 SD_MOSI
PD2 82 TMC-MISO
PD1 81 TMC-SCK
PD0
VDDA 22
VSSA 19
NC 73
BOOT0 94
VBAT 6
OSC_IN 12
OSC_OUT 13
NRST 14 RESET
VREF+ 21
VREF- 20
R8
DGND
HGND
+3V3
C10
Ry1
C11
Y1
C13
C12
C14
Y2
R14
C15
S1
J11
Header 3X2
SW_DIO
SW_CLK
RESET
R15
R16
U4
A0 A1 A2 GND
VCC WP SCL SDA
I2C_SCL
I2C_SDA
C16
R17
R18
C17 C18 C19 C20 C21
R10
R19
U5
CS SO WP GND
VCC HOLD CLK SI
FL_CS
SPI2_MISO
SPI2_SCK
SPI2_MOSI
C22
R12
R11
1,2,3,4,5=E0,E1,X,Y,Z
repeat(M,1,5)
A4988.SchDoc
EN(1..5)
DIR(1..5)
STEP(1..5)
EN
DIR
STEP
repeat(EN)
repeat(DIR)
repeat(STEP)
repeat(TMC_SCK)
repeat(TMC_MOSI)
repeat(TMC_MISO)
repeat(UART)
TMC_SCK
TMC_MOSI
TMC_MISO
UART
TMC_SCK(1..5)
TMC_MOSI(1..5)
TMC_MISO(1..5)
UART(1..5)
VCC
VDD
+3V3
J19
TMC-SCK 2
RPK0B
7 TMC_SCK1
TMC_SCK2
TMC_SCK3
TMC_SCK4
TMC_SCK5
TMC-MOSI 3
RPK0C
6 TMC_MOSI1
TMC_MOSI2
TMC_MOSI3
TMC_MOSI4
TMC_MOSI5
TMC-MISO 1
RPK0A
8 TMC_MISO1
TMC_MISO2
TMC_MISO3
TMC_MISO4
TMC_MISO5
U_THM
THM.SchDoc
TB
TH1
TH2
PE5
SPI2_MISO
SPI2_SCK
T1_CS
MISO
SCK
U_ENDstops
ENDstops.SchDoc
X-
Y-
Z-
Z+
E1-
U_SD
SD.SchDoc
SD_CS
SD_MOSI
SD_SCK
SD_MISO
SD_D1
SD_D2
SD_CD
U_MOSFET
MOSFET.SchDoc
HEATER1
E_FAN
HOTBED
HEATER2
HEATER_BED
U_USB
USB.SchDoc
RESET
RXD0
TXD0
U_WIFI
WIFI.SchDoc
RXD1
TXD1
WIFI_CTRL
WIFI_IO0
IO1
U_Power
Power.SchDoc
U_P-AUX
P-AUX.SchDoc
EXP1
BEEPER
FSMC_LIGHT
SPI2_NSS
LCD_D6
BTN_ENC
LCD_EN
LCD_RS
LCD_D4
LCD_D5
LCD_D6
LCD_D7
FSMC_RST
LCD_D5
LCD_D7
EXP2
SPI1_MISO
BTN_EN1
BTN_EN2
SPI1_RS
SPI1_SCK
SPI1_CS
SPI1_MOSI
RESET
PW_DET
MT_DET1
MT_DET2
PB2
IO0
3D_TOUCH
Fid1
Fid2
Fid3
Fiducial
Fiducial
Fiducial

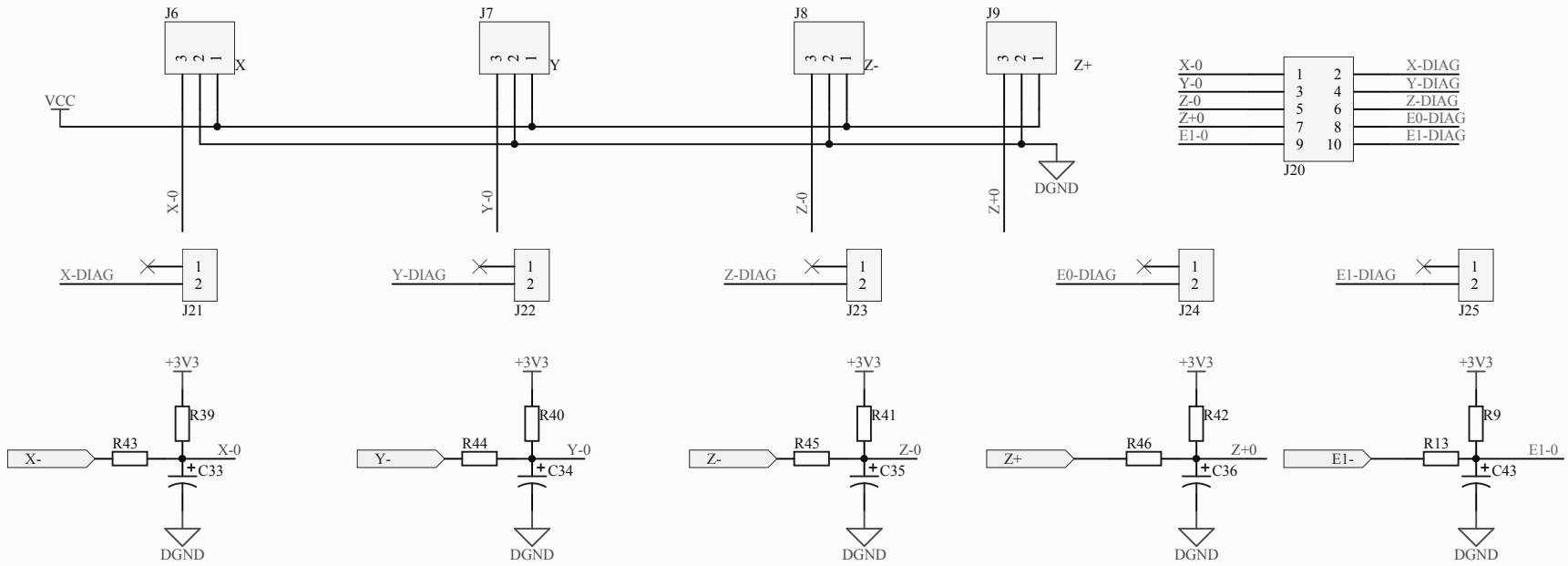
J6
J7
J8
J9
X
Y
Z-
Z+
VCC
DGND
X-0
Y-0
Z-0
Z+0
X-DIAG
Y-DIAG
Z-DIAG
E0-DIAG
E1-DIAG
J21
J22
J23
J24
J25
J20
E1-0
E0-DIAG
+3V3
R39
R40
R41
R42
R9
R43
R44
R45
R46
R13
C33
C34
C35
C36
C43
X-
Y-
Z-
Z+
E1-

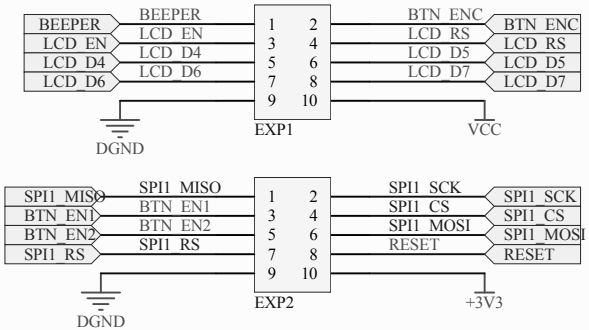
BEEPER
LCD_EN
LCD_D4
LCD_D6
BEEPER
LCD_EN
LCD_D4
LCD_D6
1 2
3 4
5 6
7 8
9 10
EXP1
BTN_ENC
LCD_RS
LCD_D5
LCD_D7
BTN_ENC
LCD_RS
LCD_D5
LCD_D7
DGND
VCC
SPI1_MISO
BTN_EN1
BTN_EN2
SPI1_RS
SPI1_MISO
BTN_EN1
BTN_EN2
SPI1_RS
1 2
3 4
5 6
7 8
9 10
EXP2
SPI1_SCK
SPI1_CS
SPI1_MOSI
RESET
SPI1_SCK
SPI1_CS
SPI1_MOSI
RESET
DGND
+3V3

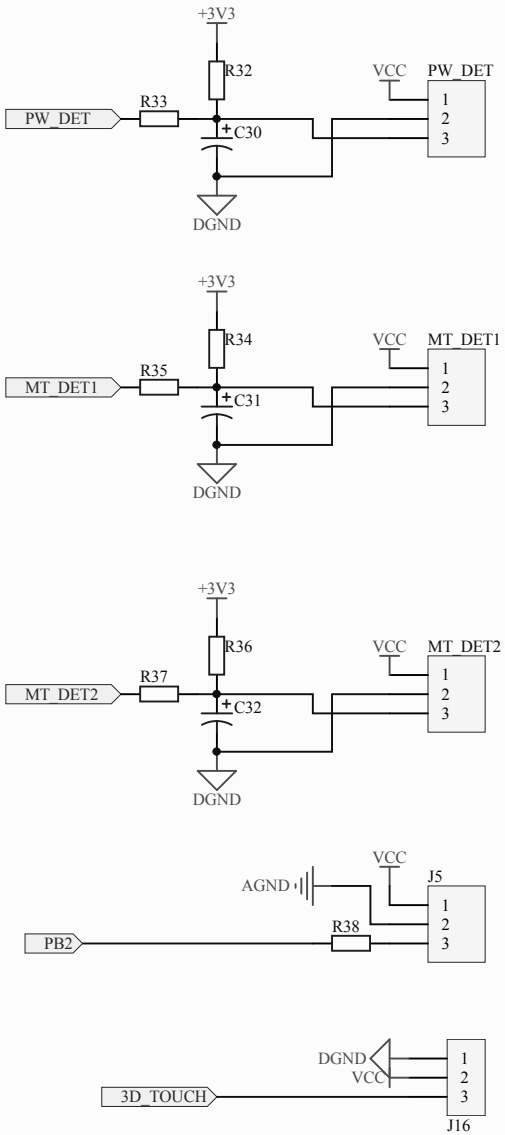
+3V3
R32
VCC
PW_DET
PW_DET
R33
C30
1
2
3
DGND
+3V3
R34
VCC
MT_DET1
MT_DET1
R35
C31
1
2
3
DGND
+3V3
R36
VCC
MT_DET2
MT_DET2
R37
C32
1
2
3
DGND
VCC
J5
AGND
R38
PB2
1
2
3
DGND
VCC
3D_TOUCH
1
2
3
J16

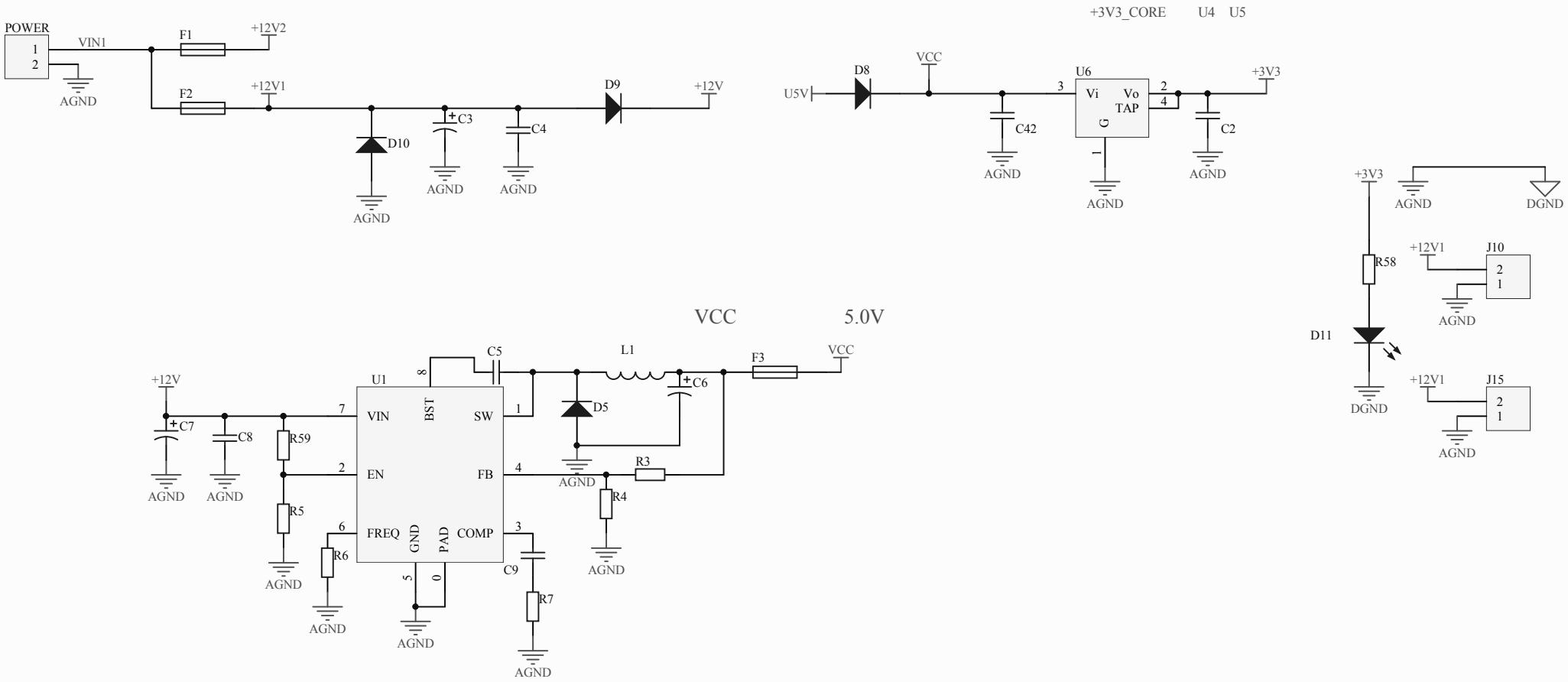
POWER
1
2
VIN1
AGND
F1
F2
+12V2
+12V1
D10
C3
C4
D9
+12V
+3V3_CORE
U4 U5
U5V
D8
VCC
C42
U6
Vi
Vo
TAP
G
3
2
4
1
+3V3
C2
AGND
+3V3
DGND
R58
+12V1
J10
D11
DGND
J15
VCC
5.0V
C5
L1
F3
VCC
C6
U1
8
VIN
BST
SW
7
1
D5
+12V
C7
C8
R59
2
EN
FB
4
R3
R4
R5
6
FREQ
GND
PAD
COMP
3
R6
5
0
C9
R7

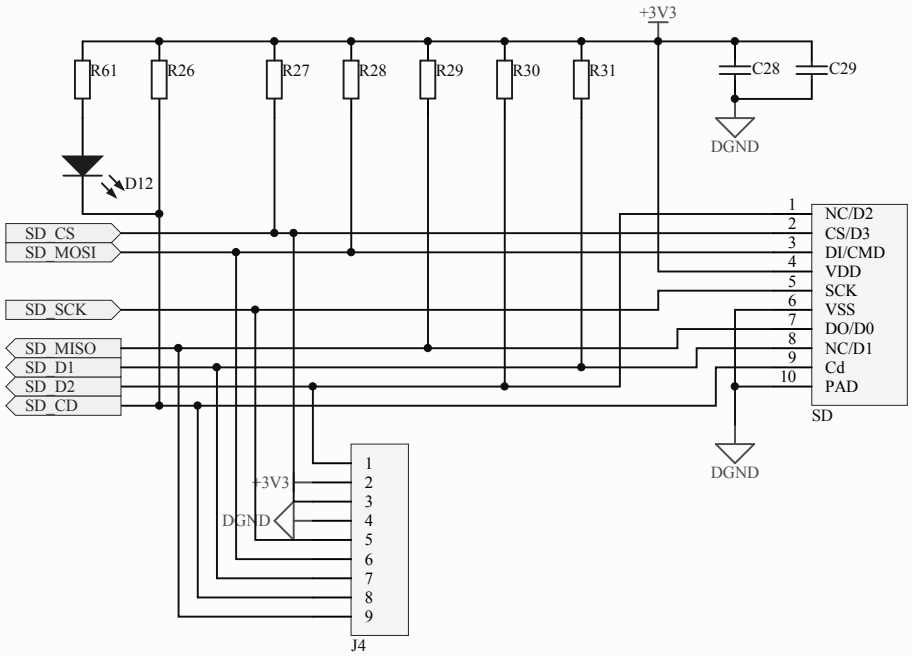
+3V3
R61
R26
R27
R28
R29
R30
R31
C28
C29
DGND
D12
SD_CS
SD_MOSI
SD_SCK
SD_MISO
SD_D1
SD_D2
SD_CD
1
2
3
4
5
6
7
8
9
10
NC/D2
CS/D3
DI/CMD
VDD
SCK
VSS
DO/D0
NC/D1
Cd
PAD
SD
DGND
+3V3
DGND
1
2
3
4
5
6
7
8
9
J4

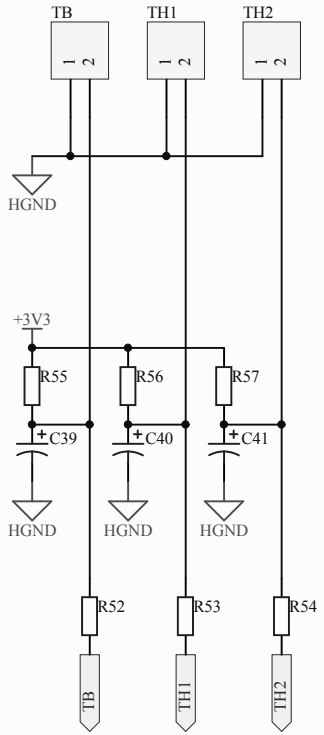
TB
TH1
TH2
1
2
HGND
+3V3
R55
R56
R57
C39
C40
C41
R52
R53
R54
TB
TH1
TH2

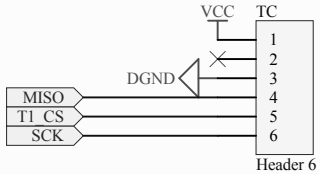
VCC
TC
1
2
3
4
5
6
DGND
MISO
T1_CS
SCK
Header 6

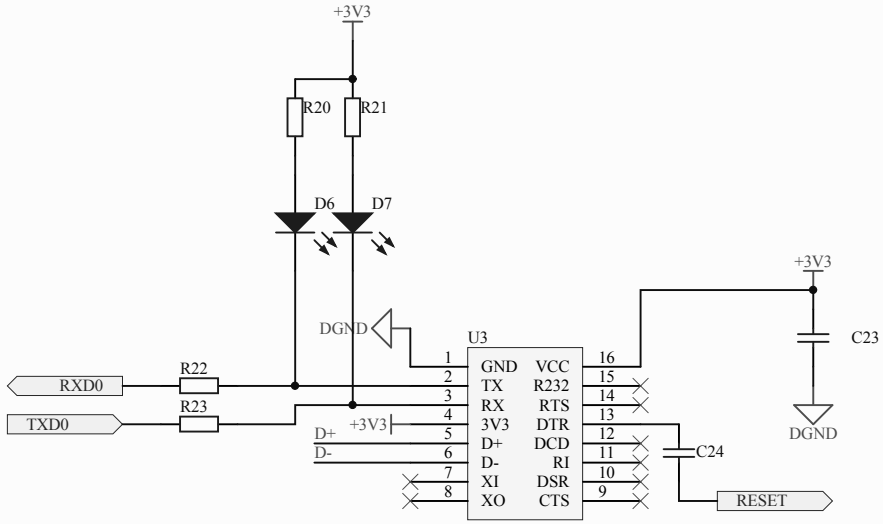
+3V3
R20
R21
D6
D7
DGND
U3
+3V3
C23
DGND
RXD0
R22
TXD0
R23
+3V3
D+
D-
C24
RESET
GND
TX
RX
3V3
D+
D-
XI
XO
VCC
R232
RTS
DTR
DCD
RI
DSR
CTS

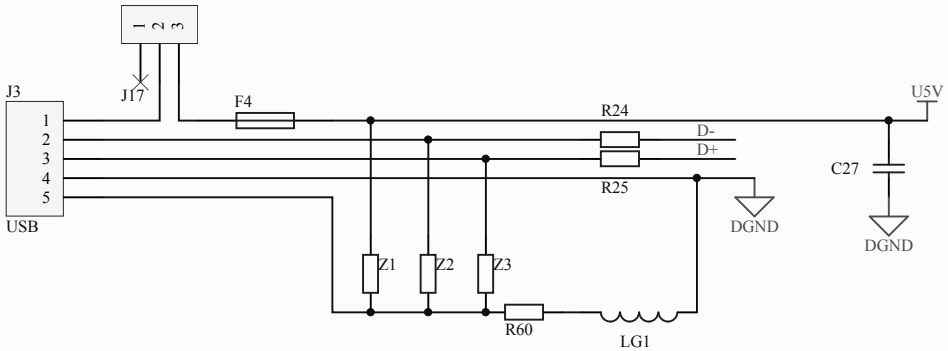
J3
USB
J17
F4
R24
R25
D-
D+
U5V
C27
DGND
DGND
Z1
Z2
Z3
R60
LG1

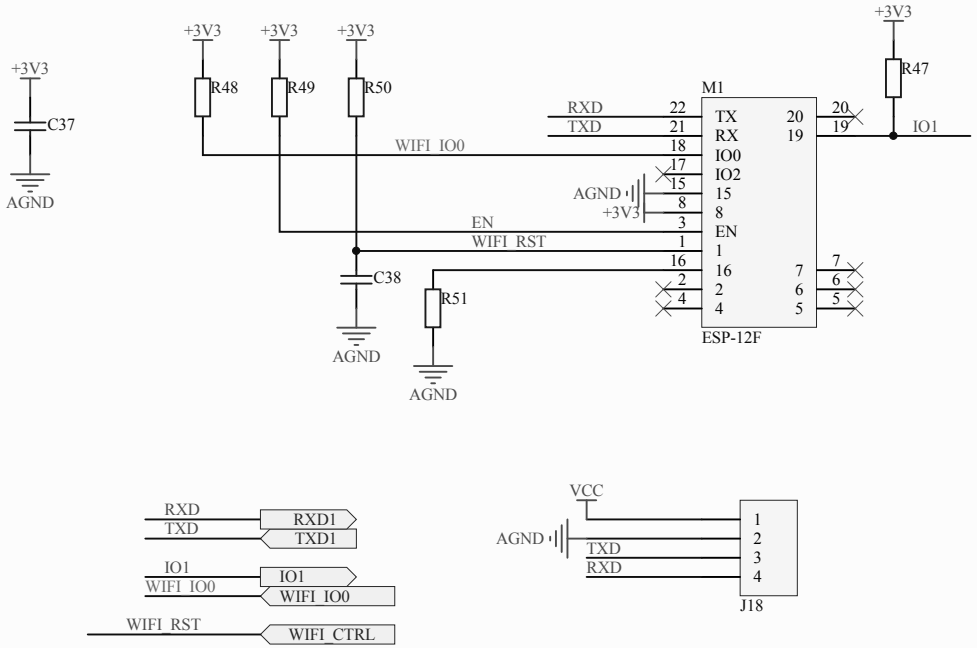
+3V3
C37
AGND
+3V3
R48
+3V3
R49
+3V3
R50
WIFI_IO0
EN
WIFI_RST
C38
AGND
R51
AGND
M1
RXD
TXD
TX
RX
IO0
IO2
15
8
EN
1
16
2
4
20
19
7
6
5
AGND
+3V3
ESP-12F
+3V3
R47
IO1
RXD
TXD
RXD1
TXD1
IO1
WIFI_IO0
IO1
WIFI_IO0
WIFI_RST
WIFI_CTRL
VCC
AGND
TXD
RXD
1
2
3
4
J18

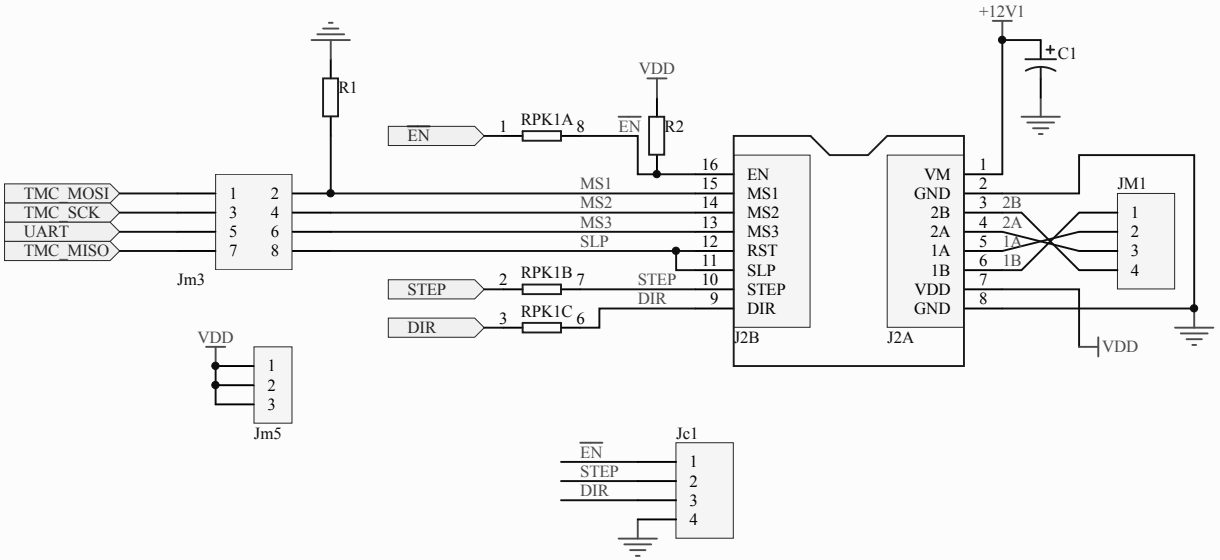
+12V1
C1
VDD
R1
R2
EN
RPK1A
RPK1B
RPK1C
STEP
DIR
TMC_MOSI
TMC_SCK
UART
TMC_MISO
Jm3
MS1
MS2
MS3
SLP
EN
MS1
MS2
MS3
RST
SLP
STEP
DIR
J2B
VM
GND
2B
2A
1A
1B
VDD
GND
J2A
JM1
Jm5
Jc1

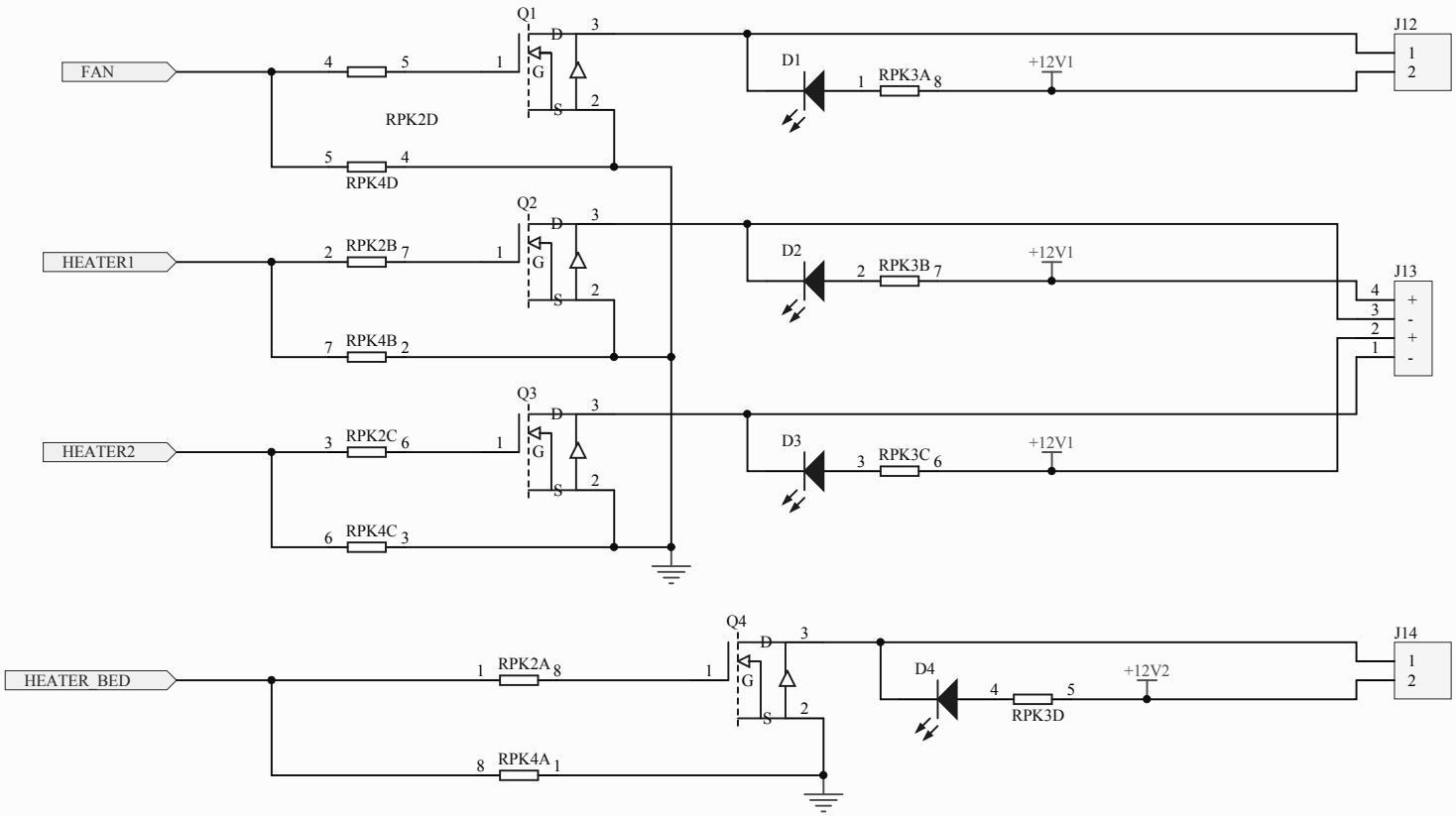
FAN
HEATER1
HEATER2
HEATER_BED
Q1
Q2
Q3
Q4
D
G
S
RPK2D
RPK4D
RPK2B
RPK4B
RPK2C
RPK4C
RPK2A
RPK4A
D1
D2
D3
D4
RPK3A
RPK3B
RPK3C
RPK3D
+12V1
+12V2
J12
J13
J14
+
-